Work Order ID 73381

Wednesday, August 31, 2011 1:44:13 PM

Sept pkn

Item ID: D3538-1 **Accept** **Setup Start**

Revision ID:

Item Name: Hinge Bracket **Stop**

Start Date: 9/1/2011 **Start Qty:** 24.00 **Cust Item ID:**

Required Date: 9/12/2011 **Req'd Qty:** 24.00 **Customer:**

Reference:

Approvals: **Process Plan:** MK **Date:** 11-09-01 **Tooling:** **Date:** **Run Start**

QC: **Date:** **SPC (Y/N):** **Date:** **Stop**

Sequence ID/ Work Center ID	Operation Description	Set Up/ Run Hours	Tool ID	Tool #	Plan Code	Accept Qty	Reject Qty	Reject Number	Insp. Stamp
Draw Nbr D3538	**Revision Nbr** Rev A								
100	BAND SAW	0.00							
Bandsaw	**Memo**	0.00	B.A 11/09/08			24	ϕ		
Jeaspa Bandsaw	Cut blanks 1.500" long								
110	HAAS CNC VERTICAL MACHINING #1	0.00							
HAAS 1	**Memo**	0.00	ark 11/09/09			24	ϕ		
HAAS CNC vertical machine #1	1-Machine as per Folio FA651 and Dwg D3538□2-Deburr		B.A 11/09/12						
120	QC2- Inspect parts off machine FAI/FAIB	0.00	ark 11/09/09						
QC	**Memo**	0.00				24	ϕ		
Quality Control									

Dart Aerospace Ltd

W/O:		WORK ORDER CHANGES					
DATE	STEP	PROCEDURE CHANGE	By	Date	Qty	Approval Chief Eng / Prod Mgr	Approval QC Inspector

Part No: _____ **PAR #:** _____ **Fault Category:** _____ **NCR:** Yes No **DQA:** _____ **Date:** _____

Resolution: _____ **Disposition:** _____ **QA: N/C Closed:** _____ **Date:** _____

NCR:		WORK ORDER NON-CONFORMANCE (NCR)						
DATE	STEP	Description of NC Section A	Corrective Action Section B			Verification Section C	Approval Chief Eng	Approval QC Inspector
			Initial Chief Eng	Action Description Chief Eng	Sign & Date			

NOTE: Date & initial all entries

H:\fFORMS\Quality Assurance\approved QA\NCRWO RevE

Work Order ID 73381

Wednesday, August 31, 2011 1:44:13 PM

Item ID: D3538-1 **Accept** **Setup Start**

Revision ID:

Item Name: Hinge Bracket **Stop**

Start Date: 9/1/2011 **Start Qty:** 24.00 **Cust Item ID:**

Required Date: 9/12/2011 **Req'd Qty:** 24.00 **Customer:**

Reference:

Approvals: **Process Plan:** _____ **Date:** _____ **Tooling:** _____ **Date:** _____ **Run Start**

QC: _____ **Date:** _____ **SPC (Y/N):** _____ **Date:** _____ **Stop**

Sequence ID/ Work Center ID	Operation Description	Set Up/ Run Hours	Tool ID	Tool #	Plan Code	Accept Qty	Reject Qty	Reject Number	Insp. Stamp
130	QC8- Inspect parts - second check	0.00 JL 11-09-12							
QC	Memo	0.00							
Quality Control									
140	Chemical Conversion Coat per QSI005 4.1	0.00							
HandFinish	Memo	0.00							
Hand Finishing									
150	White Gloss(Ref:4.3.5.1) per QSI005 4.3-Alum	0.00							
Powdercoat	Memo	0.00							
Powder Coating	START TIME: 8:20 ☐FINISH TIME: 8:50 ☐OVEN TEMPERATURE: 320°F								

24 BL 11-9-13.

24x Ø M-L 11/04/11 BL

M 118439

Dart Aerospace Ltd

W/O:		WORK ORDER CHANGES					
DATE	STEP	PROCEDURE CHANGE	By	Date	Qty	Approval Chief Eng / Prod Mgr	Approval QC Inspector

Part No: _____ **PAR #:** _____ **Fault Category:** _____ **NCR:** Yes No **DQA:** _____ **Date:** _____

Resolution: _____ **Disposition:** _____ **QA: N/C Closed:** _____ **Date:** _____

NCR:		WORK ORDER NON-CONFORMANCE (NCR)						
DATE	STEP	Description of NC Section A	Corrective Action Section B			Verification Section C	Approval Chief Eng	Approval QC Inspector
			Initial Chief Eng	Action Description Chief Eng	Sign & Date			

NOTE: Date & initial all entries

H:\fFORMS\Quality Assurance\approved QA\NCRWO RevE

Work Order ID 73381

Wednesday, August 31, 2011 1:44:13 PM

Item ID: D3538-1 **Accept** **Setup Start**

Revision ID: **Stop**

Item Name: Hinge Bracket

Start Date: 9/1/2011 **Start Qty:** 24.00 **Cust Item ID:**

Required Date: 9/12/2011 **Req'd Qty:** 24.00 **Customer:**

Reference:

Run Start

Approvals: **Process Plan:** _____ **Date:** _____ **Tooling:** _____ **Date:** _____

Stop

QC: _____ **Date:** _____ **SPC (Y/N):** _____ **Date:** _____

Sequence ID/ Work Center ID	Operation Description	Set Up/ Run Hours	Tool ID	Tool #	Plan Code	Accept Qty	Reject Qty	Reject Number	Insp. Stamp
160	QC3- Inspect Part Finish	0.00				24	counted 0		11/04/14
QC Quality Control	Memo	0.00							
170	Identify as per dwg & Stock Location: 065	0.00							11/9/04
Packaging Packaging	Memo	0.00							
180	QC21- Final Inspection - Work Order Release	0.00							11/9/14
QC Quality Control	Memo	0.00							

MF 11-09-14

Dart Aerospace Ltd

W/O:		WORK ORDER CHANGES					
DATE	STEP	PROCEDURE CHANGE	By	Date	Qty	Approval Chief Eng / Prod Mgr	Approval QC Inspector

Part No: _____ **PAR #:** _____ **Fault Category:** _____ **NCR:** Yes No **DQA:** _____ **Date:** _____

Resolution: _____ **Disposition:** _____ **QA: N/C Closed:** _____ **Date:** _____

NCR:		WORK ORDER NON-CONFORMANCE (NCR)						
DATE	STEP	Description of NC Section A	Corrective Action Section B			Verification Section C	Approval Chief Eng	Approval QC Inspector
			Initial Chief Eng	Action Description Chief Eng	Sign & Date			

NOTE: Date & initial all entries

H:\fFORMS\Quality Assurance\approved QA\NCRWO RevE

Picklist Print

Wednesday, August 31, 2011 1:44:10 PM

Work Order ID: 73381

Parent Item: D3538-1

Parent Item Name: Hinge Bracket

Start Date: 9/1/2011 **Required Date:** 9/12/2011

Start Qty: 24.00 **Required Qty:** 24.00

Comments: IPP Rev:A New Issue 06-10.03 EC

Component Item ID/ Item Name	Replacement Item ID	Mfg/ Purch	Bin Item	Primary Location	Last Location	Route Seq ID	Unit of Measure	Qty on Hand	Qty per Kit	Total Qty	Qty Issued	Date Issued	Status
M6061T6B1.250X01.250		Purchased	No			100	f	6.5091	0.19	4.8			
6061-T6 Bar 1.25 x 1.25													

Location	Loc Qty	Loc Code
MAT003	6.5091	
117798	6.5091	

.875 ft B.A 11/09/08

(M6061T6 1.5 x 1.25) 118071 (this time only → material shortage) 2.425 ft B.A 11/09/08

M6061T6B1.500 X 01.250

Dart Aerospace Ltd

W/O:		WORK ORDER CHANGES					
DATE	STEP	PROCEDURE CHANGE	By	Date	Qty	Approval Chief Eng / Prod Mgr	Approval QC Inspector

Part No: _____ **PAR #:** _____ **Fault Category:** _____ **NCR:** Yes No **DQA:** _____ **Date:** _____

Resolution: _____ **Disposition:** _____ **QA: N/C Closed:** _____ **Date:** _____

NCR:		WORK ORDER NON-CONFORMANCE (NCR)						
DATE	STEP	Description of NC Section A	Corrective Action Section B			Verification Section C	Approval Chief Eng	Approval QC Inspector
			Initial Chief Eng	Action Description Chief Eng	Sign & Date			

NOTE: Date & initial all entries

H:\fFORMS\Quality Assurance\approved QA\NCRWO RevE

DART AEROSPACE LTD	Work Order:	73381
Description: Hinge Bracket	Part Number:	D3538-1
Inspection Dwg: D3538 **Rev:** A		Page 1 of 1

FIRST ARTICLE INSPECTION CHECKLIST

[X] First Article [ ] Prototype

Drawing Dimension	Tolerance	Actual Dimension	Accept	Reject	Method of Inspection	Comments
0.75	+/-0.030	.754	—		Vern ML-06	
0.375	+/-0.010	.378	—		"	
0.241	+/-0.010	.241	—		"	
0.830	+/-0.010	.830	—		"	
Ø0.172	+0.005/-0.001	Ø.172	—		"	
Ø0.400	+0.006/-0.001	Ø.400	—		"	
0.031	+/-0.010	.027	—		"	
1.31	+/-0.030	1.313	—		"	
0.375	+/-0.010	.373	—		"	
0.99	+/-0.030	.992	—		"	
0.125	+/-0.010	.127	—		"	
R0.19	+/-0.030	R.190	—		R-6	
0.083	+/-0.010	.085	—		Vern ML-06	
93°	+/-0.5°	93°	—		"	
0.674	+/-0.010	.672	—		"	
R0.38	+/-0.030	R.380	—		R-6	
Ø0.172	+0.005/-0.001	Ø.172	—		Vern ML-06	

Measured by:	[signature]	Audited by:	[signature]	Prototype Approval:	N/A
Date:	11/09/09	Date:	11-09-12	Date:	N/A

Rev	Date	Change	Revised by	Approved
A	07.05.31	New Issue	KJ/JLM [signature]	[signature]

Dart Aerospace Ltd

W/O:		WORK ORDER CHANGES					
DATE	STEP	PROCEDURE CHANGE	By	Date	Qty	Approval Chief Eng / Prod Mgr	Approval QC Inspector

Part No: _____ **PAR #:** _____ **Fault Category:** _____ **NCR:** Yes No **DQA:** _____ **Date:** _____

Resolution: _____ **Disposition:** _____ **QA: N/C Closed:** _____ **Date:** _____

NCR:		WORK ORDER NON-CONFORMANCE (NCR)						
DATE	STEP	Description of NC Section A	Corrective Action Section B			Verification Section C	Approval Chief Eng	Approval QC Inspector
			Initial Chief Eng	Action Description Chief Eng	Sign & Date			

NOTE: Date & initial all entries

H:\fFORMS\Quality Assurance\approved QA\NCRWO RevE

DESIGN	DRAWN BY	DART AEROSPACE LTD HAWKESBURY, ONTARIO, CANADA	
LE	LE		
CHECKED	APPROVED	DRAWING NO.	REV. A
PH	#	D3538	SHEET 1 OF 2
DATE		TITLE	SCALE
06.10.13		HINGE BRACKET	1:1

REV	DATE	DESCRIPTION
A	06.10.13	NEW ISSUE

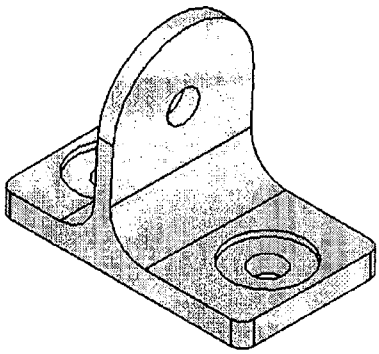

RELEASED 06.10.13 #

#73381

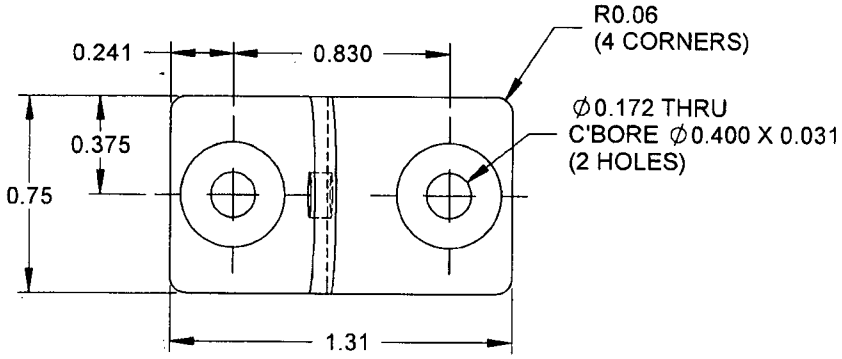

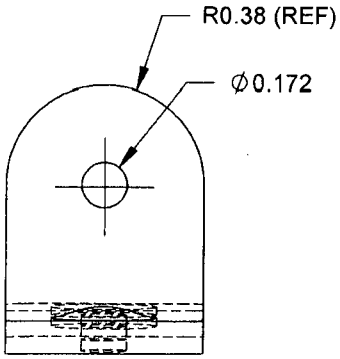

AUXILIARY VIEW A

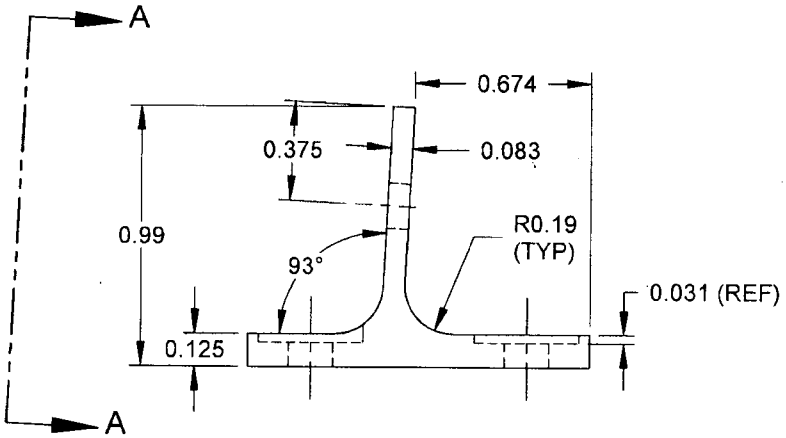

D3538-1 HINGE BRACKET

NOTES:
1) MATERIAL: 6061-T6 ALUMINUM PER QQ-A-225/8 OR QQ-A-200/8 (REF DART SPEC M6061T6B)
2) FINISH: CHEMICAL CONVERSION COAT PER DART QSI 005 4.1
POWDER COAT WHITE (4.3.5.1) PER DART QSI 005 4.3
3) TOLERANCES ARE PER DART QSI 018 UNLESS OTHERWISE NOTED
4) ALL DIMENSIONS ARE IN INCHES UNLESS OTHERWISE NOTED
5) BREAK ALL SHARP CORNERS TO 0.010 MAX
6) IDENTIFY WITH P/N D3538-1 USING FINE POINT PERMANENT INK MARKER

Dart Aerospace Ltd

W/O:		WORK ORDER CHANGES					
DATE	STEP	PROCEDURE CHANGE	By	Date	Qty	Approval Chief Eng / Prod Mgr	Approval QC Inspector

Part No: _____ **PAR #:** _____ **Fault Category:** _____ **NCR:** Yes No **DQA:** _____ **Date:** _____

Resolution: _____ **Disposition:** _____ **QA: N/C Closed:** _____ **Date:** _____

NCR:		WORK ORDER NON-CONFORMANCE (NCR)						
DATE	STEP	Description of NC Section A	Corrective Action Section B			Verification Section C	Approval Chief Eng	Approval QC Inspector
			Initial Chief Eng	Action Description Chief Eng	Sign & Date			

NOTE: Date & initial all entries

DESIGN	DRAWN BY	DART AEROSPACE LTD HAWKESBURY, ONTARIO, CANADA	
LE	LE		
CHECKED	APPROVED	DRAWING NO.	REV. A
PH		D3538	SHEET 2 OF 2
DATE		TITLE	SCALE
06.10.13		HINGE BRACKET	1:1

RELEASED 06-10-13

#73381

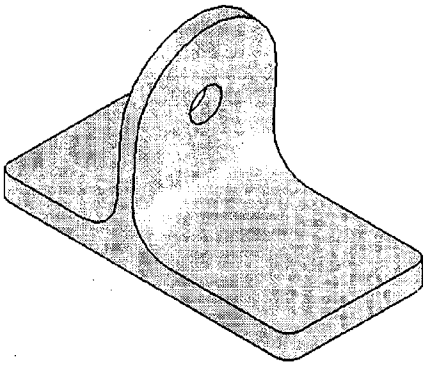

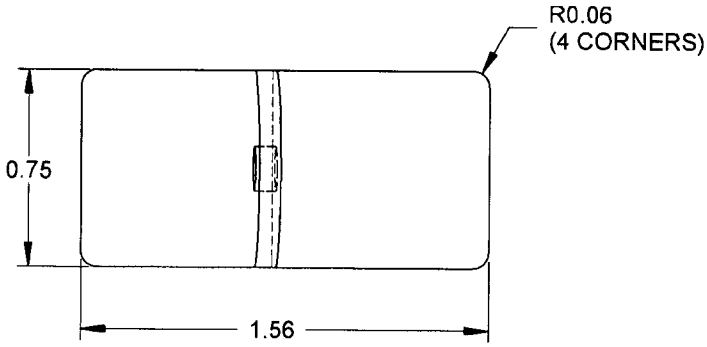

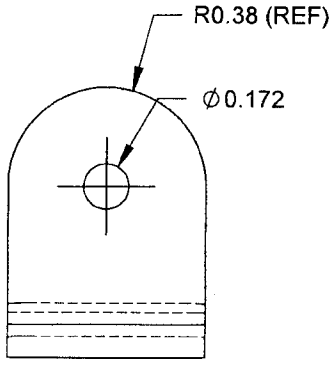

AUXILIARY VIEW B

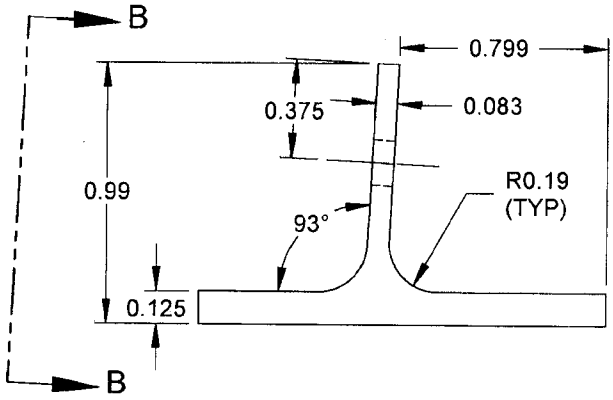

D3538-3 HINGE BRACKET

NOTES:
1) MATERIAL: 6061-T6 ALUMINUM PER QQ-A-225/8 OR QQ-A-200/8 (REF DART SPEC M6061T6B)
2) FINISH: CHEMICAL CONVERSION COAT PER DART QSI 005 4.1
POWDER COAT WHITE (4.3.5.1) PER DART QSI 005 4.3
3) TOLERANCES ARE PER DART QSI 018 UNLESS OTHERWISE NOTED
4) ALL DIMENSIONS ARE IN INCHES UNLESS OTHERWISE NOTED
5) BREAK ALL SHARP CORNERS TO 0.010 MAX
6) IDENTIFY WITH P/N D3538-3 USING FINE POINT PERMANENT INK MARKER

Dart Aerospace Ltd

W/O:		WORK ORDER CHANGES					
DATE	STEP	PROCEDURE CHANGE	By	Date	Qty	Approval Chief Eng / Prod Mgr	Approval QC Inspector

Part No: _____ **PAR #:** _____ **Fault Category:** _____ **NCR:** Yes No **DQA:** _____ **Date:** _____

Resolution: _____ **Disposition:** _____ **QA: N/C Closed:** _____ **Date:** _____

NCR:		WORK ORDER NON-CONFORMANCE (NCR)						
DATE	STEP	Description of NC Section A	Corrective Action Section B			Verification Section C	Approval Chief Eng	Approval QC Inspector
			Initial Chief Eng	Action Description Chief Eng	Sign & Date			

NOTE: Date & initial all entries